Atwood®
1120 North Main Street • Elkhart, IN 46514
PHONE: 574•264•2131 **FAX**: 574•206•9713
INTERNET: http://www.atwoodmobile.com

LITERATURE NUMBER MPD 66385

LEVELEGS™ SYSTEM

FOR TOWABLE RV'S

•Installation •Operation •Maintenance

ENGLISH, FRANÇAIS (et Canada)

24 HOUR TROUBLESHOOTING HELP CALL - 800-884-7012
Provided by Coach Net®, the largest RV owner support company in North America.
Not affiliated with/supported by/or warranted by Atwood Mobile Products

Effective 12/10/07

SAFETY ALERT SYMBOLS

Safety Symbols alerting you to potential personal safety hazards. Obey all safety messages following these symbols.

⚠ WARNING	⚠ CAUTION
avoid possible injury or death	avoid possible injury and/or property damage

FOR YOUR SAFETY READ ALL INSTRUCTIONS BEFORE INSTALLATION AND OPERATION

Installer: Provide these instructions to the consumer.
Consumer: Keep documents for future reference.
Atwood Levelegs™ Levelers are intended for use on recreational vehicles, motorhomes and trailers.

⚠ WARNING
VEHICLE CAN MOVE OR COLLAPSE

- Never exceed the rated capacity of the leveler as stated on its label.
- Levelers are not designed to be used as jacks. Do not use levelers to lift the vehicle during tire changes, axle work or other servicing. The tires must stay on the ground.

INSTALLATION

LEVELER LEG

1. Prior to installation, retract the levelers so the foot pads are within 1/2″ to 1″ from the end of the outer housing (FIG 1-F).
2. Position Leveler leg frame bracket (FIG 1-C & 4-C) vertically on frame so that there is 8-9″ minimum of ground clearance (4A-B) for a fully retracted leg when the RV is loaded to its maximum GVWR. Leveler legs may be mounted on inside or outside of frame and require corresponding Cross Brace Kit.
3. Weld frame bracket using two (2) 5/16″ welds as shown (FIG 5-A). Place leveler leg into mounting bracket with tabs up against bottom edge of mounting strap (FIG 6-A) and bolt into place using 2 sets of 3/8″ carriage bolts, 3/8″ washers and 3/8″ nuts (FIG 6-B). Torque both bolts to 20 ft. lbs.
4. Repeat steps 1-3 for opposite leveler leg keeping the mounting positions approximately the same distance behind axle.
5. Cross brace attachment - Attach top cross brace brackets (FIG 6-C) to each jack under the tab on the jack using 3/8″ carriage bolts and 3/8″ nuts and torque to 20 ft-lbs. Have top cross brace bracket openings facing opposite directions, one forward and one rearward. Attach each cross brace tube to each attached bracket using the 5/16″-18 bolts and nuts (FIG 6-D). Do not tighten the bolts and nuts. Let the other ends of the tubes rest on the foot of the opposite jack. Put 5/16″-18 bolt through center of cross brace tubes and put the nut on the bolt, but do not tighten. Place lower cross brace bracket (FIG 6-E) on jack facing the opposite direction as the top cross brace bracket that is on the jack. Slide the lower bracket up and attach the cross brace tube end (FIG 6-F) to the cross brace bracket with 5/16-18 bolts and nuts. Put 3/8″ carriage bolts and nuts on cross brace brackets and tighten to 20 ft-lbs. Insure lower brackets do not prevent jack from fully retracting. Tighten all 5/16″-18 nuts to 12 ft-lbs.

CONTROLS

⚠ WARNING
EXPLOSION

- Controller is not ignition protected. DO NOT install in areas that require ignition protected devices (such as battery or propane tank storage compartments).

1. Install **Auto Position Control Module** (FIG 2-A) in clean, interior area protected from moisture and loose materials. Control module must be mounted face up within 10° of level and with Forward Arrow pointing toward the front of the RV. Fasten solidly to surface using corner holes and appropriate hardware. Failure to do so will affect function.
2. Position **Auto Position Key Pad** and **Activation Switch** in clean, interior box at front of RV with access from side of RV (preferably road side). Keypad and switch should be protected from moisture and loose materials (FIG 8).
3. Provide cutouts for the Key Pad and Activation Switch as shown (FIG 7). Note: Reference Key Pad when making cut-out; there is a tight clearance.
4. Use corner holes on both Key Pad and Activation Switch to fasten to surface using appropriate hardware.
5. Make connections of Activation Switch wiring harness to Key Pad and Control Module (FIG 10-J & K). Wiring harness must be run in safe area and wire tied appropriately.
6. Attach hooking/unhooking procedure label near key pad.

POWER CONNECTIONS (FIG 10)

A - Driver Front Landing Leg
B - Passngr Front Landing Leg
C - Driver Rear Leveler
D - Passenger Rear Leveler
E - 125 Resetable Circuit Breaker for 2 AWG battery wire
F - Red (-) Motor Gear Box Lead
G - Yellow (+) Motor Gear Box Lead
H,J,K - Control Pad Wire Harness
P - Female Connector
Q - Male Connector

CONTROL MODULE

1. Connect the controller to the chassis 12 VDC battery through the manual reset circuit breaker or fuse (FIG 3-G).
2. Connect the controller to the battery through 2 AWG wire (FIG 10-N).
3. Terminate 2 AWG wire (FIG 9-A) power wire to controller through a 2 AWG 1/4″ ID ring terminal (FIG 9-B)
4. Attach ring terminal to controller with following components:
   - #10 conductive washer FIG 9-C
   - #10 lock conductive washer FIG 9-D
   - 10-32 conductive nut FIG 9-E

Note: Torque nut (FIG 9-E) to 20-25 in-lbs.

Control Module to Levelers and Landing Gear

1. Use wiring harness kit 66386.
2. Run longer motor wires (FIG 3-E) (connector at motor end) from each rear leveler leg back to control module. Plug sealed Delphi® connector into motor connector. At control module end cut wires to desired length, strip wires back about 3/8″ , and crimp to appropriate butt connector on Molex® connector marked R (rear) (FIG 3-A) and matching wire colors. Plug into control module connection marked rear (FIG 10-S).

3. Run shorter wires (FIG 3-C & D) (butt connector at motor end) from each of the front Direct Drive Landing Gear to control module. Crimp opposite color wires to motor wires, red to yellow and yellow to red. At control module end cut wires to desired length, strip wires back about 3/8″ and crimp to appropriate butt connector on molex connector marked F (front) (FIG 3-B) and matching wire colors. Plug into control module connection marked front (FIG10-R).

PREDELIVERY PREPARATION

Exit Error Mode State

Levelers are shipped in The Error Mode State. To take controls out of the error mode state, complete an **All Retract** by following these steps.

1. Ensure slideout rooms are fully retracted (in their inboard position) and the RV is supported other than on Levelers.
2. Switch Activation Switch to ON position (FIG 8-A). Press the ON button (FIG 8-B) to turn unit on, Green LED'S should light up under ON button.
3. Press and hold the RET/ALL buttons (FIG 8-G&H) for 2-3 seconds until the levelers begin to retract. The levelers will retract to their fully retracted position, when completed the leveler lights will all go to solid red (FIG 8-L).

Manually Position RV to Level

Note: If the RV is already in desired level position, then skip down to **To Set Auto Position**.

1. Park the RV on a reasonably level site. Check for rocks, holes or other obstructions. Warn all persons to stand clear of vehicle.
2. Do not extend the slideouts until RV is level.
3. Press EXT/ALL/FRONT to extend the front Landing Gear to the ground (FIG 8-J,G,C). Front position LED's will go to blinking green when completed and the Wait LED will light while in process.
4. Press EXT/ALL/REAR to extend the rear levelers to the ground (FIG 8-J,G,F). Rear position leds will go to blinking green when completed and the Wait LED will light while in process.
5. Press and hold EXT (or RET) (FIG 8-H,J) and position button (DRIVER, PASS, FRONT or REAR) (FIG 8-C,D,E,F) to bring RV to desired position. Levelers always work in pairs.

To Set Auto position

1. Ensure RV is in the position you want. If not, then see **Manually Position RV to Level**.
2. Ensure the Activation Switch is ON (FIG 8-A).
3. Press ON button (FIG 8-B) turning the unit off. All LED's will go off.
4. Press EXT button (5) times (FIG 8-J).
5. Press RET button (5) times (FIG 8-H).
6. Unit will respond by blinking all leds slowly.
7. Press the ALL button (3) times (FIG 8-G) and leds will stop blinking.
8. Press RET/REAR to retract rear levelers (FIG 8-H,F). Wait until rear leveler leds go solid green.
9. Press RET/FRONT to retract front landing gear (FIG 8-H,C). Be sure the RV is supported or hooked up to Tow Vehicle and wait until front leveler LED's go solid green.

Final Preparation

1. Wipe off any excess fluid from the top of the foot before delivery.
2. Run through U**nhooking From Tow Vehicle and Leveling RV** and **Hooking Up to Tow Vehicle** to insure proper operation.
3. Check that the Activation Switch is in the OFF position (FIG 8-A). This will keep the system from draining the battery.

OPERATION

⚠ CAUTION
PERSONAL INJURY

- Stand clear of the vehicle.

⚠ WARNING
VEHICLE CAN TIP

- Soft/spongy ground may allow levelers to sink. Levelers must be on firm solid and resonably level ground or surface prior to operation.
- Insure area below and around leveler is clear of obstructions.
- Do not place blocks under the leveler for additional ground clearance.

Unhooking From Tow Vehicle and Leveling RV

1. Park RV on a reasonably level site with solid ground. Check for rocks, holes or other obstructions at leveler positions. Chock RV wheels and warn all persons to stand clear of RV and Tow Vehicle.
2. Do not extend the slideouts until RV is leveled.
3. Switch Activation Switch to ON (FIG 8-A)
4. Press ON to turn key pad on (FIG 8-B). LED will light ON button.
5. Press EXT/ALL/FRONT (FIG 8-J,G,C) to auto extend landing gear to ground. LED's for front levelers will be blinking green to indicate landing gear is down.
6. Press and hold EXT/FRONT (FIG 8-J,C) or RET/FRONT (FIG 8-H,C) to get King-pin/Gooseneck into preferred hitch detachment position.
7. Detach trailer lights, harness and hitch using manufacturer's suggested procedure. Move tow vehicle to safe position clear of RV.
8. Press AUTO (FIG 8-K) to extend rear levelers and auto-position RV. Process will take 2-3 minutes and wait LED will be lit. All leveler LED's will blink green when process complete.
9. Press the ON (FIG 8-B) button to turn key pad off and switch the Activation Switch OFF (FIG 8-A) to minimize battery usage.

These controls have the following features to facilitate leveling:

- **TO MAXIMIZE AVAILABLE LEVELER STROKE** During the initial activation of a pair of levelers following the ALL extend activation, for every six (6) seconds the first pair of levelers extend, the opposite pair of levelers will retract for two (2) seconds. This process will repeat for the first 60 continuous seconds of extension of first pair of levelers.
- **FULL EXTENSION** If a leveler is fully extended, its corresponding LED will indicate this and further operation of that pair of levelers in the extend direction is prevented. If the switch is held on, the second leveler of the pair will operate with its alternate pair partner leveler. (i.e., if the front two levelers are extending and the left front leveler becomes fully extended, the right front leveler will continue to operate and the right rear leveler will start to extend.) This is to keep the frame from twisting.
- **LOAD COMPENSATION** If one leveler becomes disproportionally more loaded than its pair partner, power will shut off to the first leveler. The second leveler will continue to operate until the load is more balanced between the pair of levelers. Power to the first leveler will then resume.

Hooking Up to Tow Vehicle / Retraction of Levelers

1. Have all slideout rooms retracted (in their inboard position) and warn all persons to stand clear of RV.
2. Switch Activation Switch to ON (FIG 8-A).
3. Press ON to turn key pad on (FIG 8-B). LED will light ON button.
4. Press RET/REAR (FIG 8-H,F) to auto retract the rear levelers. LED's for rear levelers will go to solid green to indicate levelers are fully retracted. A quick visual inspection should be done to check leveler ground clearance is proper for safe towing.
5. Press and hold EXT/FRONT or RET/FRONT (FIG 8-J,H,C) to position king-pin/gooseneck to proper hitch connection height.
6. Follow hitch manufacturer's hook-up procedure to tow vehicle and connect trailer lights harness.
7. Once RV is safely connected to tow vehicle, press RET/FRONT (FIG 7-A,C) to auto retract landing gear. LED's will go to solid green to indicate landing gear is fully retracted. A quick visual check of landing gear ground clearance should be done to insure safe towing.
8. Press ON button to turn power off and switch Activation Switch to OFF (FIG 8-A).
9. Remove Chocks before towing.

Emergency Stop

Leveler extension or retraction in any auto function mode can be stopped by **pressing any button** on the key pad. The controller will re-enter most functions after an emergency stop. If not, retract all levelers and begin function from that point.

⚠ CAUTION
PRODUCT DAMAGE

- Do not move vehicle until levelers and landing legs are fully retracted.
- Damage can occur to levelers, coach and surrounding property if the levelers are not fully retracted prior to vehicle being moved.

SYSTEM PROTECTION FEATURES

Nine Cycle Maximum

- The controls will shut off for 15 minutes any time nine (9) full retractions occur in less than 30 minutes.
- When this occurs, all four-system status lights blink off and on.
- This sequence can be overruled by turning the ignition off, then back on.

Low Voltage Protection

- If the voltage falls below 11.5 VDC, leveler operation will cease and the low voltage LED will flash.
- Controls will be inoperable until battery voltage climbs above 13 VDC, at which time leveling functions will resume.

Front Too Low

- Should the angle of front of the RV drop below level the system will stop the Landing Gear from retracting and possibly setting the front of the RV on the ground.

Manual Override

- To Manually Extend or Retract Leveler, use a 1/2″ socket on Drive Nut on end of motor (FIG 11).

Rotate nut counter clock-wise (looking from bottom end of nut [FIG 11) to extend leveler.

NOTE: It takes 500 revolutions of nut to extend/retract leveler 1″.

⚠ CAUTION

PERSONAL INJURY/PRODUCT DAMAGE

- Battery operated drills, 9.6V to 18V, are powerful. Hold drill with both hands to protect your wrist. Keep loose clothing and body parts away from drill as the reaction torque from the drill may cause it to kick back.
- Refer to your drill manufacturer's operation manual.
- Do not over-extend or over-retract levelers. Each leveler has built-in stops. Excessive force applied against the stops will cause damage.
- When manually overriding the leveler do not use pneumatic tools to operate any leveler. They can over-extend or over-retract the leveler.
- If the motor will not extend/retract the leveler and the motor is making a ratcheting sound (clutch slipping), do not use the manual override. Immediately contact an Atwood Service Center and have leveler replaced. Do not use the leveler until replaced.

EMERGENCY STOP ANY LEVELER ACTIVITY
PRESS ANY BUTTON ON KEY PAD

MAINTENANCE

1. Internal parts of leveler are permanently lubricated at the factory and do not require any further lubrication.
2. If it is not possible to get levelers to operate freely, replace leveler.
3. Should problems or questions arise, contact your dealer, camper manufacturer, or Atwood Consumer Service Department 866-869-3118.

ATWOOD LIMITED WARRANTY

Atwood Mobile Products warrants to the retail owner and subject to the below mentioned conditions, that this product will be free of defects in material or workmanship for a period of two years from the original date of purchase. Atwood's liability hereunder is limited to the replacement of the product, repair of the product, or replacement of the product with a reconditioned product at the discretion of the manufacturer. This warranty is void if the product has been damaged by accident, unreasonable use, neglect, tampering or other causes not arising from defects in material or workmanship. This warranty extends to the original owner of the product only and is subject to the following conditions:

1. For two (2) years commencing with the date of purchase, Atwood will provide the replacement or repair of any Hardware System and Components that are found to be defective by Atwood in material or workmanship.
2. **In the event of a warranty claim, the original owner must contact the Atwood Consumer Service Department, 1120 North Main, Elkhart, IN 46514 USA. Phone: (574-264-2131).** Warranty Claim Service must be performed as approved by the Atwood Consumer Service Department. Warranty replacement hardware systems and components or parts will be furnished freight prepaid. Labor cost to repair or replace will be limited to the amount of the original purchase price of the systems and components. The replaced warranty products or parts become the property of Atwood Mobile Products and must be returned to the Atwood Consumer Service Department freight prepaid, unless prior arrangements have been made.
3. This limited warranty is valid only when the product is applied, installed, maintained and operated in accordance with this Atwood Installation Maintenance and Operating Manual. Any deviation from these recommended specifications must be approved in writing by Atwood.
4. ANY IMPLIED WARRANTIES arising by way of State Law, including any implied warranty of merchantability and any implied warranty of fitness for a particular purpose are limited in duration to the term of this Limited Warranty. Atwood makes no further warranty of any nature beyond this Limited Warranty. No person has authority to enlarge, amend or modify this Limited Warranty.
5. Any action to enforce this warranty shall not be commenced more than one (1) year after the expiration of this warranty. 7.21.07

10/9/06 MPD 70335

ATWOOD® 5TH WHEEL LEVELEGS

Unhooking From Tow Vehicle and Leveling RV	
1. Park on solid ground without obstructions. Chock wheel and warn persons to stand clear of RV.	
2. Do not extend slideouts until RV is leveled.	
3. Switch Activation Switch ON.	
4. Turn on Key Pad	**ON**
5. Auto extend Landing Gear (Front Legs)	**EXT/ALL/FRONT**
6. Set preferred King Pin height for unhooking hitch	**EXT/FRONT RET/FRONT**
7. Detach Tow Vehicle from RV and move to safe distance.	
8. Auto extend rear levlers and level RV.	**AUTO**
9. Once RV is level, turn unit off and Activation Switch OFF.	**ON**

Hooking Up To Tow Vehicle Retraction of Levelers	
1. Retract slide rooms and warn all persons to stand clear of RV	
2. Switch Activation Switch ON.	
3. Turn on Key Pad	**ON**
4. Auto retract the rear levelers	**RET/ALL/REAR**
5. Set King Pin height (per hitch mfg.'s recommendations) for proper hitch connection	**EXT/FRONT RET/FRONT**
6. Position tow vehicle, connect hitch and connect trailer wiring harness	
7. Auto retract Landing Gear (front legs) once safely hitched.	**RET/ALL FRONT**
8. Turn unit off and Activation Switch OFF	**ON**
9. Remove chocks from wheels before towing.	

CAUTION: READ INSTRUCTION MANUAL 66385 BEFORE USE

Atwood®
1120 North Main Street • Elkhart, IN 46514
PHONE: 574•264•2131 **FAX**: 574•206•9713
INTERNET: http://www.atwoodmobile.com

LEVELEGS™ SYSTEM
TROUBLE SHOOTING GUIDE

Effective: 11/21/07

Guides are only intended for use on Atwood® products by service technicians who have successfully completed Atwood® training. This guide should be used in conjunction with the appropriate Instruction Manual provided with the product and any applicable Industry Standards. This is not intended to be a complete list. Please direct questions concerning service of Atwood® products to 800-825-4328 before proceeding.

⚠ WARNING

PERSONAL INJURY AND/OR PRODUCT DAMAGE

- **If any of the following conditions develop, the RV must not be used until proper corrective action is taken.**

CAUSE WITH SOLUTIONS

SCROLLING LIGHTS ON KEYPAD
- Communication between keypad and control board lost.
  1. Check wiring between keypad and control board.

JACK CONTINUES TO CLUTCH AND WILL NOT TURN OFF
- Short jack extension followed by jack retraction.
  1. Put system in error mode by disconnecting one jack from power and pressing RET and ALL. Reconnect jack to power. Manually extend individual jacks for 10 seconds by holding down the EXT key and the two jack keys that make up the camper corner of that jack. Listen to insure all jacks move when manually activated. Press RET and ALL to retract all jacks.

RED AND GREEN LIGHTS COME ON FOR A SPECIFIC JACK LOCATION
- Loss of power to jack
  1. Manually extend individual jack by holding down the EXT key and the two jack keys that make up the camper corner of that jack. Listen to insure all jacks move when manually activated. Press RET and ALL to retract all jacks.
  2. If jacks do not move, inspect wiring at jacks and at control board to insure proper connection.

KEY PAD WILL NOT TURN ON
- No power to key pad
  1. Check activation switch
  2. Check wiring between keypad and control board.

JACKS WILL NOT MOVE
- No power to jacks
  1. If emergency stop was activated by pressing any keypad button, press 'RET' and 'ALL' to reset legs.

AUTO POSITION DOES NOT LEVEL THE COACH
- The last position in memory was not level. Leveler System always returns to position in memory.
  1. The control board must be mounted horizontally, on a solid fixed surface and can not be more than 10 degrees out of level.
  2. Manually set coach to desired position and program position into memory, following the steps in the IOM.

PANEL LIGHTS BLINK "ON" AND "OFF"
- An Auto Position is not set
  1. Set the Auto Position, referring to the IOM.

The following error modes are built into your system to detect problems.

FALSE RET (FULL RETRACTION) ERROR MODE
- For extensions greater than 20 seconds, if the retraction time for any leveler is less than the extension time (indicating premature clutching prior to full retraction), the following occurs:
  1. Warning alarm will sound.
  2. Power is removed from the control box disabling normal operations. (This is done to encourage operator to do a visual inspection of levelers prior to further leveling operations.)
  3. The red and green LED's for the particular leveler will blink on and off to indicate the system is in an error mode.
- To proceed:
  1. Press "ON". This will shut the warning alarm off.
  2. Visually inspect the leveler.
  3. If it is required, activate levelers to correct problem. Simultaneously press the EXTEND or RETRACT mode switch along with the adjacent two (2) leveler switches common to the lit LED's. In error mode, any leveler can be activated in this manner.
  4. Complete an ALL RETRACT operation and system is now out of error mode and ready for normal operations.

NO CURRENT ERROR MODE
- During any operation if no current is detected from leveler after leveler is activated, the following occurs:
  1. Warning alarm will sound.
  2. Power is removed from the control box disabling normal operations.
  3. The red and green LED's for that leveler will blink on and off to indicate the system is in an error mode.
- To proceed:
  1. Press "ON". This will shut the warning alarm off.
  2. Simultaneously hold down all four direction buttons and the "All" button. This resets the timers so controls will detect the next clutch.
  3. Press "RET" and "ALL" buttons. The system is now out of error mode and ready for normal operations.

  If step 3 does not fix the problem, individual levelers can be retracted by simultaneously pressing the "RET" button and the adjacent two (2) leveler buttons common to the leveler requiring retraction.

LEVELER CONTINUES TO "CLUTCH"
- To proceed:
  1. Press "ON". This will shut the warning alarm off.
  2. Simultaneously hold down all four direction buttons and the "All" button. This resets the timers so controls will detect the next clutch.
  3. Press "RET" and "ALL" buttons. The system is now out of error mode and ready for normal operations.

Figure 1

A – Direct Drive Landing Gear
B – 7.5k Leveleg
C – Cross Brace Kit Mounting Bracket
D – Cross Brace bracket (4)
E – Cross brace (2)
F – Foot Pad to Housing Gap

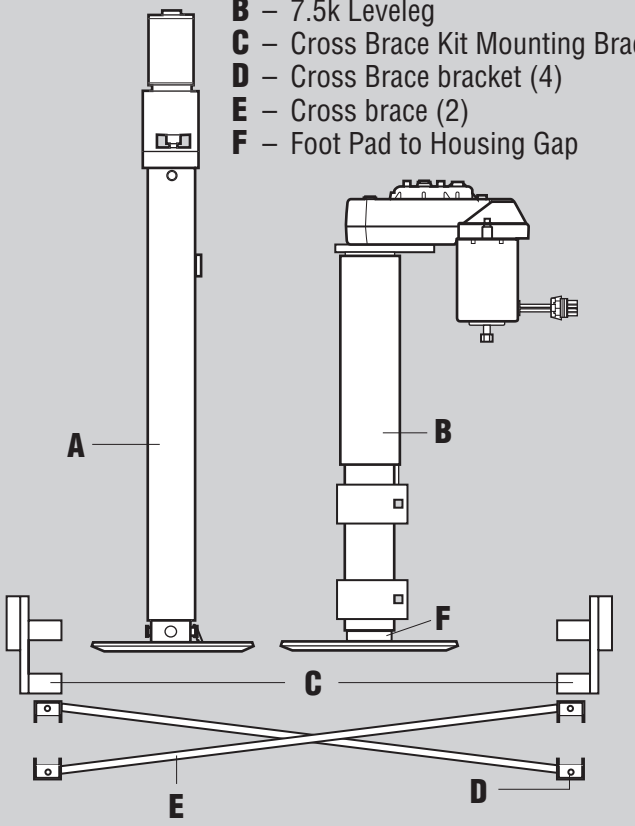

Figure 2

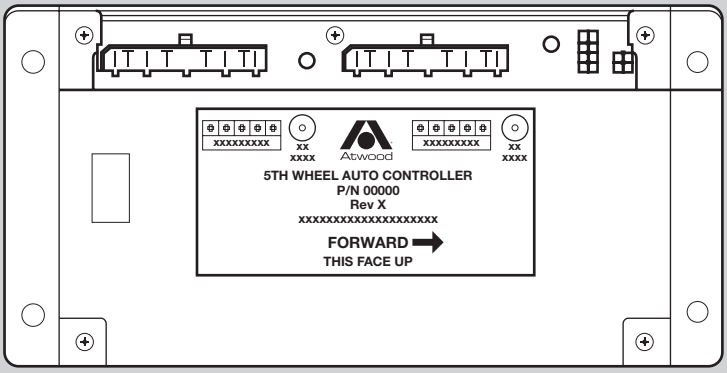

A — Control Pad

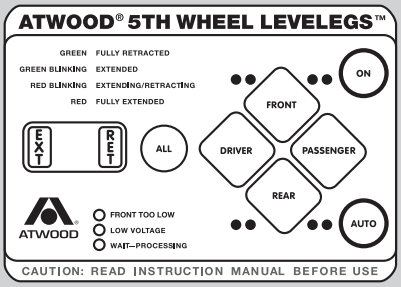

B — Keypad

Figure 3

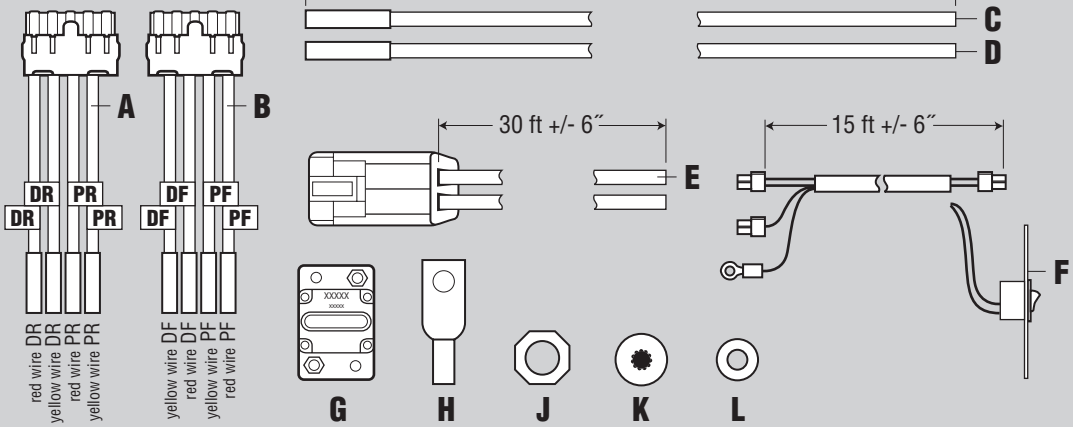

A – Rear legs Molex Connector
B – Front Landing Gear
C – Landing Gear (+) Wire (2)
D – Landing Gear (-) Wire (2)
E – Leveleg Wire (2)
F – Switch Harness (1)
G – 120 Amp Rosetable Breaker
H – Ground Lug (1)
J – Nut (2)
K – Lock Washer (2)
L – Flat Washer (2)

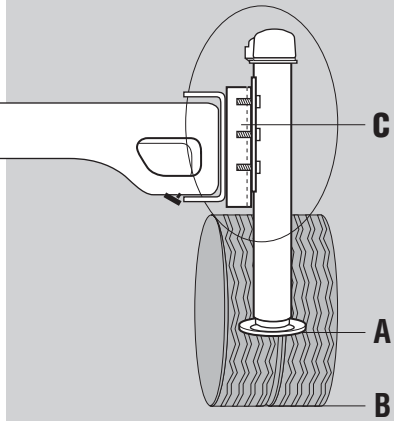

Figure 4

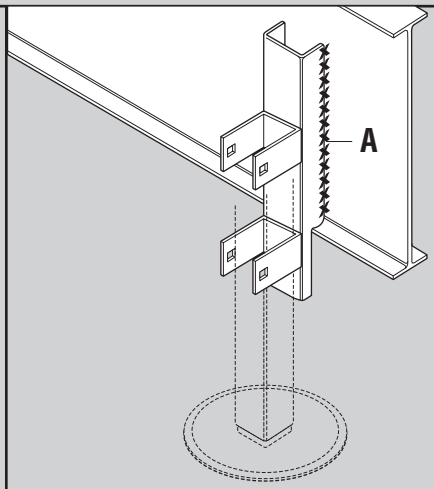

Figure 5

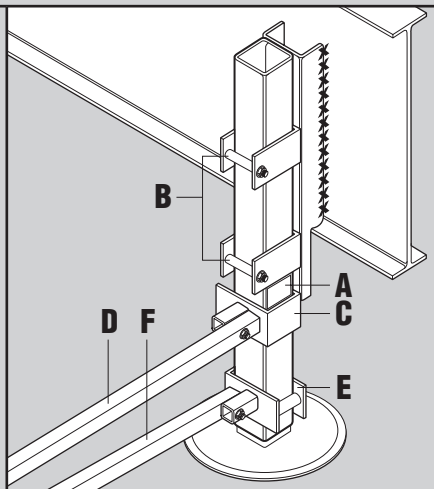

Figure 6

Figure 7

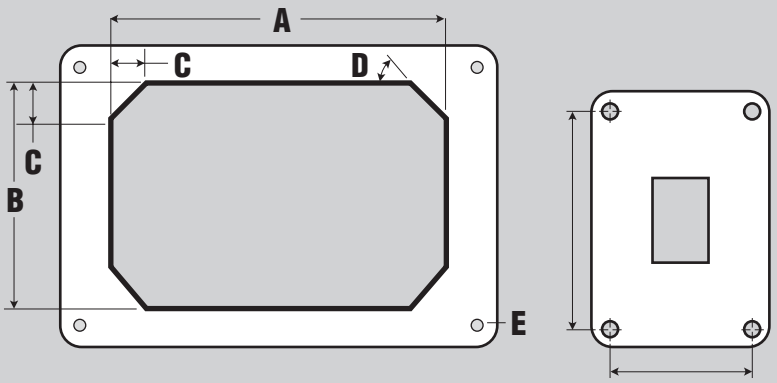

Figure 8

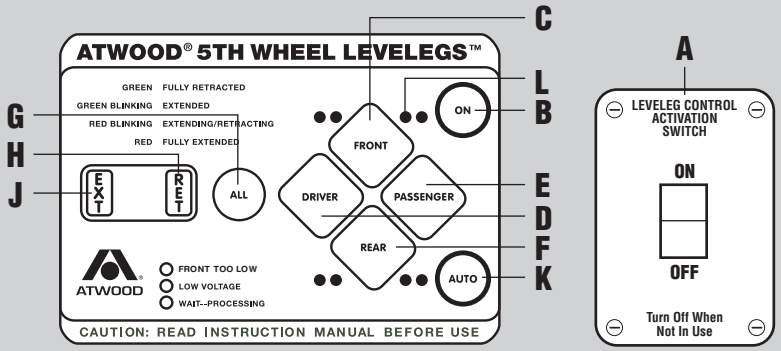

Figure 9

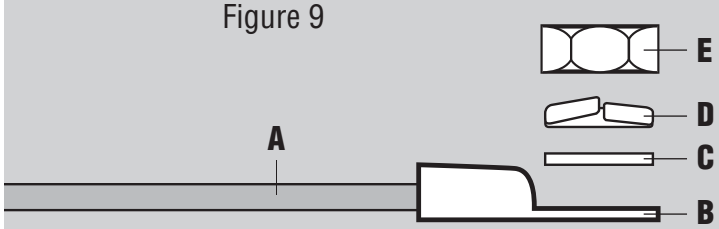

Figure 10

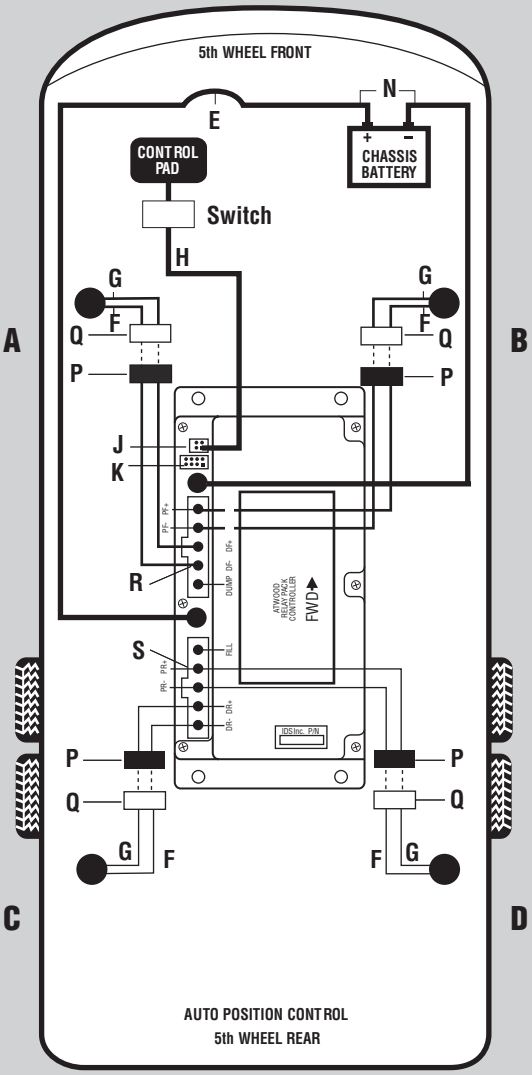
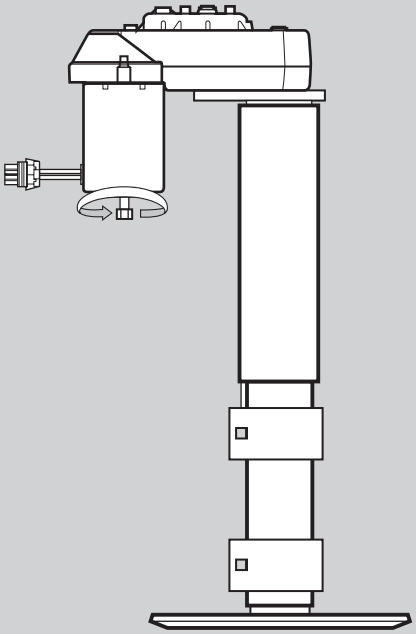
Figure 11